MARENO
kitchen solutions since 1922

| RANGE | CODE | MODEL | FUNCTION |
|---|---|---|---|
| **Self Service Free-Flow 867** | **MA91825000** | **SVERG16** | **Refrigerated display units on cabinet** |

ITEM

**4 GN 1/1 container refrigerated tank and display on open unit**

**MARENO ALI Group Srl Società a Socio Unico:**
Via Conti Agosti , 231 - 31010 Mareno di Piave (TV)
Capitale Sociale 50.000.000,00 i.v.

The data reported in this document is to be considered non-binding. The company reserves the right to make changes at any time, without prior notice.

MARENO
kitchen solutions since 1922

| RANGE | CODE | MODEL | FUNCTION |
|---|---|---|---|
| **Self Service Free-Flow 867** | **MA91825000** | **SVERG16** | **Refrigerated display units on cabinet** |

ITEM

**4 GN 1/1 container refrigerated tank and display on open unit**

**TECHNICAL SPECIFICATIONS**

| | |
|---|---|
| WIDTH (mm): | **1600** |
| DEPTH (mm): | **867** |
| HEIGHT (mm): | **1700** |
| WEIGHT (Kg): | **186** |
| VOLUME ($m^3$): | **3.07** |
| EL. POWER (kW): | **1.1** |
| VOLTAGE: | **VAC230** |
| GAS TYPE: | **R455a** |

## DESCRIPTION

Display unit with refrigerated tank depth 110 mm., capacity 4 GN 1/1 H=100 mm. Exchangers and ventilation in the upper part to facilitate air circulation. Sliding glass doors on operator side, Plexiglas swing hatched on customer side. Stainless steel grille shelves, easily removed for cleaning, can be positioned at two different heights. Led lighting. Temperature range: +4 / +15°C, temperature adjusted using a digital electronic thermostat. Base bridge unit AISI 304 stainless steel structure. Top with rounded edges, 15/10 thick, height 60 mm. Stainless steel leveling feet. Supplied with front panels.

MARENO
kitchen solutions since 1922

| RANGE | CODE | MODEL | FUNCTION |
|---|---|---|---|
| **Self Service Free-Flow 867** | **MA91825000** | **SVERG16** | **Refrigerated display units on cabinet** |

ITEM

**4 GN 1/1 container refrigerated tank and display on open unit**

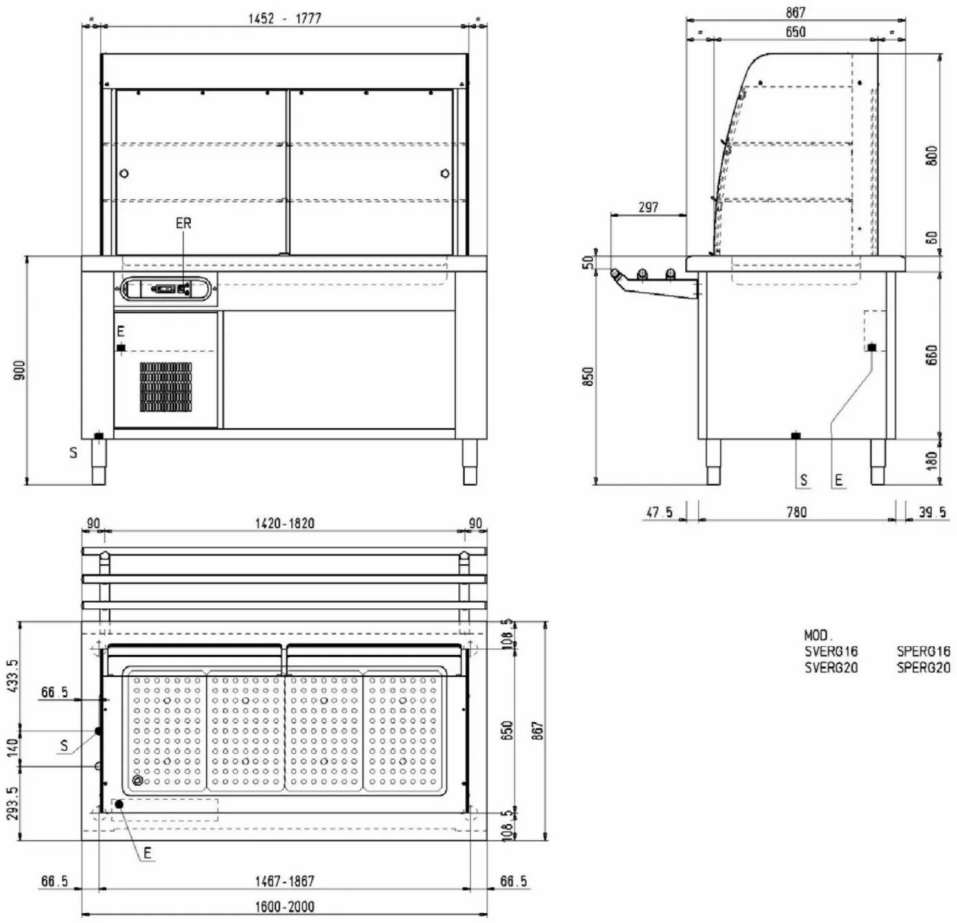


## INSTALLATION SPECIFICATIONS

| | |
|---|---|
| (E) Electrical Connection: | VAC230 50Hz |